ALL WORK SHALL BE ACCOMPLISHED IN ACCORDANCE WITH THE LATEST EDITION OF THE WSDOT STANDARD SPECIFICATIONS FOR ROAD, BRIDGE, AND MUNICIPAL CONSTRUCTION

NOTES:

1. Paint pipe threads with asphalt paint after assembly.
2. All piping to be galvanized steel.
3. Valve and piping to valve to be 2" unless otherwise noted on plan.
4. Valve Marker to be in general conformance with WSDOT Specification 9-17.
5. County approved locate wire and/or detectable marking tape shall be installed over non-metallic lines as directed by Utilities Manager. Place tape approximately 1 foot above top of the line for it's full length. Detectable marking tape shall meet the requirements of WSDOT Stand specifications, Section 9-15.18

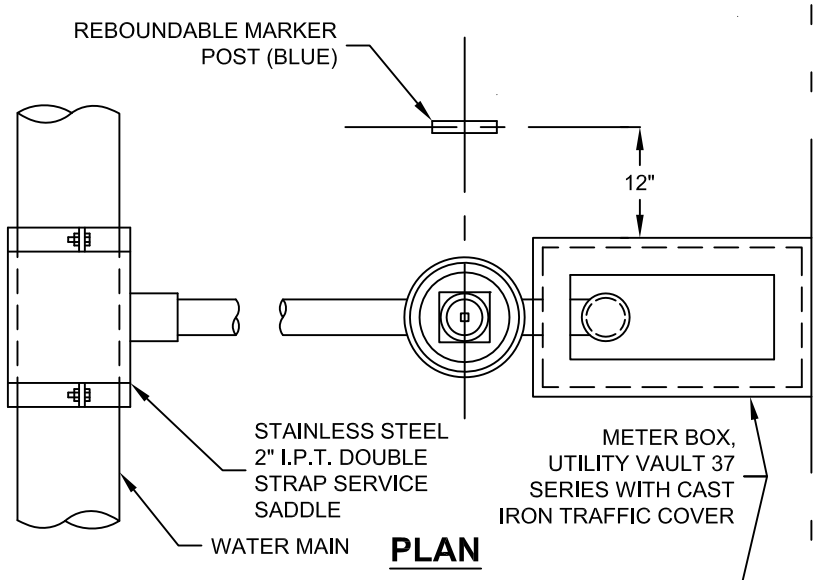

PLAN

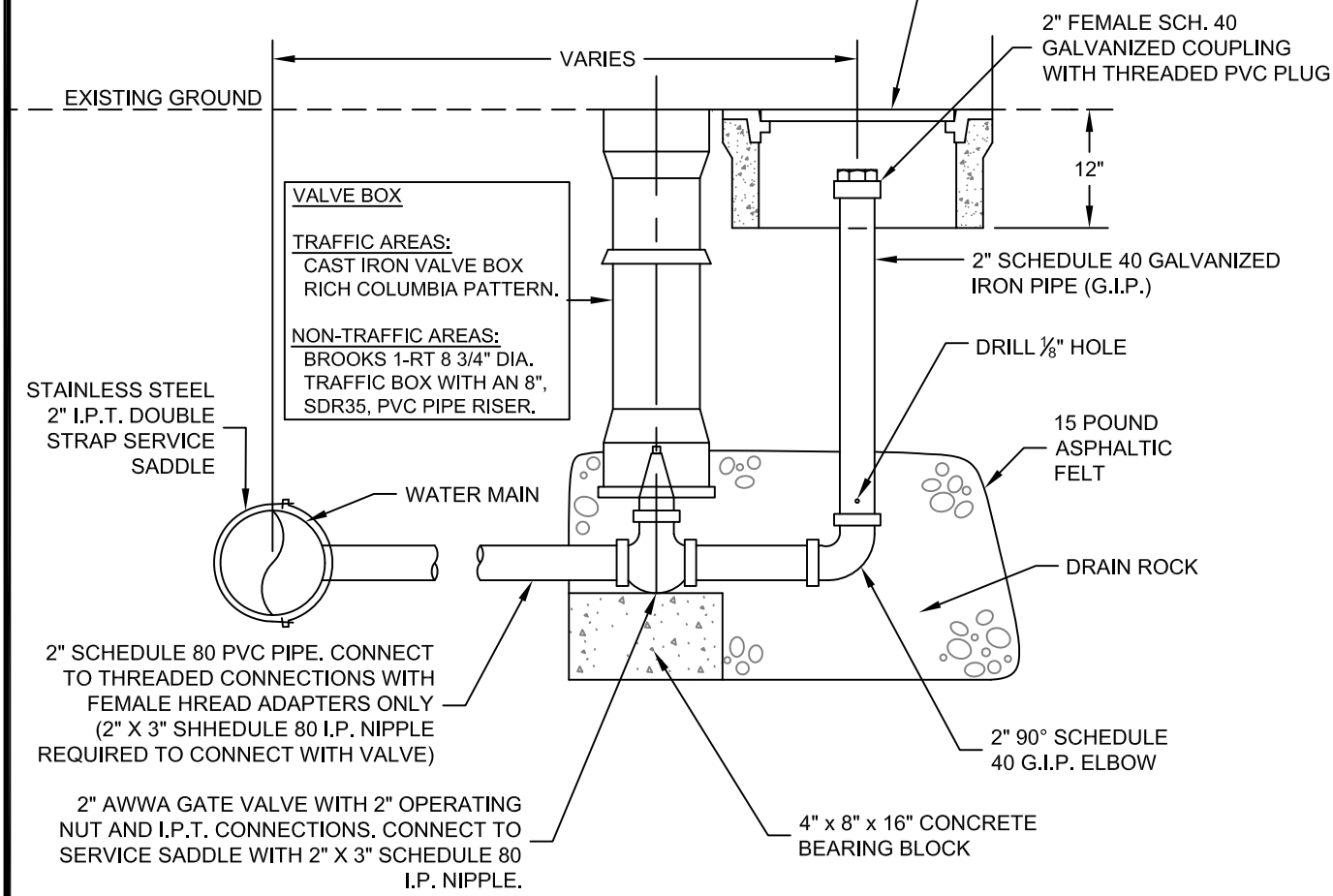

ELEVATION

KMC DESIGNED BY SMK 04/24/12 DRAWN BY BAB APPROVED BY 4/30/12 DATE	**2" BLOWOFF ASSEMBLY** N T S	COWLITZ COUNTY WASHINGTON DEPARTMENT OF PUBLIC WORKS 1600-13TH AVENUE SOUTH KELSO, WASHINGTON 98626 DRAWING:CC-1905	SHEET 1 OF 1